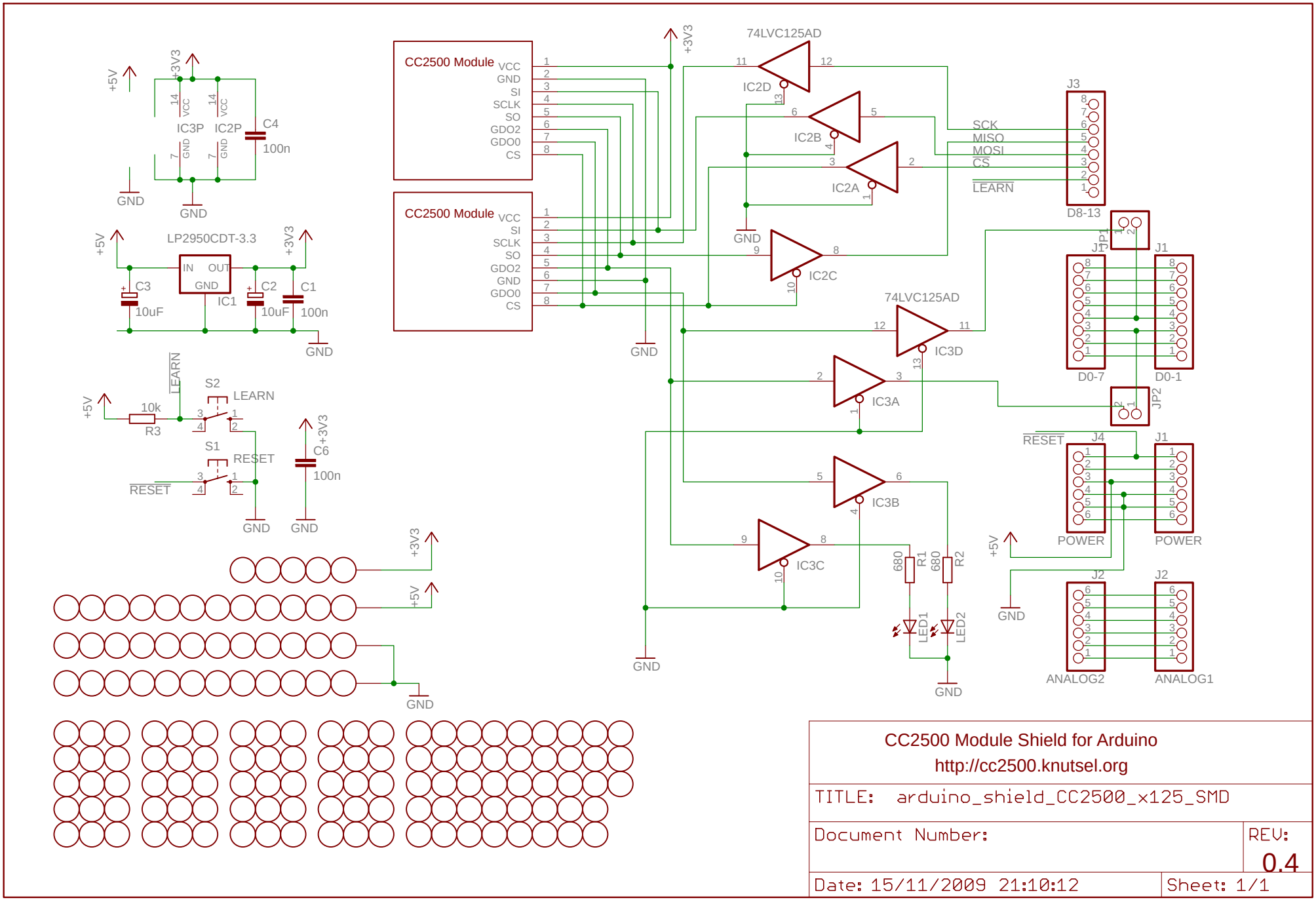

CC2500 Module Shield for Arduino

http://cc2500.knutsel.org

TITLE: arduino_shield_CC2500_x125_SMD

Document Number:

REV: 0.4

Date: 15/11/2009 21:10:12

Sheet: 1/1